SALES AND ENGINEERING DATA

RATIO SERIES:	2:1
FLUID PSIG RANGE:	10 - 200

PH30F-XXX-XXX-C
3" METALLIC DIAPHRAGM PUMP

RELEASED: 8-12-08
REVISED: 10-27-17
(REV: F) S-1441

DIMENSIONAL DATA

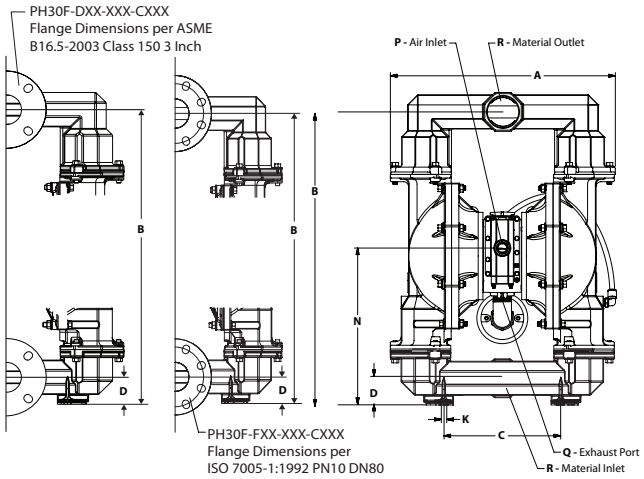

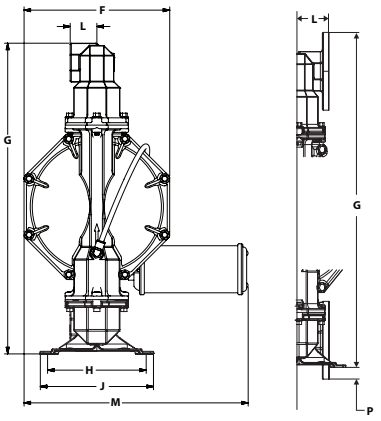

DIMENSIONS

A - 23-1/8" (587.4 mm)
B - 30" (762.0 mm)
C - 12-1/32" (306.4 mm)
D - 2-3/4" (69.9 mm)
F - 15" (381.0 mm)
G - see below
H - 10-5/32" (258.0 mm)
J - 11-21/32" (296.1 mm)
K - 9/16" (14.3 mm)
L - see below
M - 22-27/32" (580.2 mm)
N - 16" (406.4 mm)
P - 3/4 - 14 NPT
Q - 1-1/2 - 11-1/2 NPSM

NOTE: Dimensions are shown in inches and (mm) and are supplied for reference only.

SPECIFICATIONS

CONSTRUCTION

Model Series PH30F-XXX-XXX-C
Pump Type ..... Metallic, Air Operated, Double Diaphragm Pump
Ratio 2:1
Material Inlet / Outlet (female)
PH30F-ASP-SXX-C ..... 3 - 8 NPTF - 1
PH30F-BSP-SXX-C ..... Rp 3 (3 - 11 BSP parallel)
PH30F-DXX-XXX-C ..... 3" ANSI Flange (4 Holes)
PH30F-FXX-XXX-C ..... 3" DIN Flange (8 Holes)
Air Inlet (female) ..... 3/4 - 14 NPT
Air Exhaust (female) ..... 1-1/2 - 11-1/2 NPSM
Weight ... PH30F-ASP-XXX-C, BSP .... 228.8 lbs (103.8 kgs)
PH30F-DSP-XXX-C, FSP .... 245.6 lbs (111.4 kgs)
Air Section Service Kit 637369
Major Air Valve Assembly 637374-6
Fluid Section Service Kit 637441-XX

PH30F-ASP-S XX - C
637441 - XX
Diaphragm Material
Ball Material

EXAMPLE: Model #PH30F-ASP-SAA-C
Fluid Section Service Kit is 637441-AA

PERFORMANCE

Air Inlet Pressure Range ..... 10 - 100 psig (0 - 6.9 bar)
Maximum Material Inlet Pressure ... 10 psig (0.69 bar)
Fluid Pressure Range ..... 10 - 200 psig (0 - 13.8 bar)
Maximum Flow Rate ..... 150 gpm (567.8 lpm)
flooded inlet ..... 160 gpm (605.6 lpm)
Displacement / Cycle @ 100 psig ... 1.4 gal. (5.3 lit.)
Maximum Particle Size ..... 3/8" dia. (9.5 mm)
Maximum Temperature Limits (diaphragm / ball / seal material)
E.P.R. / EPDM ..... -60° to 280° F (-51° to 138° C)
Hytrel® ..... -20° to 150° F (-29° to 66° C)
Nitrile ..... 10° to 180° F (-12 to 82° C)
Polypropylene ..... 35° to 175° F (2° to 79° C)
Santoprene® ..... -40° to 225° F (-40° to 107° C)
PTFE ..... 40° to 225° F (4° to 107° C)
Viton® ..... -40° to 350° F (-40° to 177° C)
Noise Level @ 70 psig - 50 cpm① **...** 83.0 dB(A)②

① Tested with 67263 muffler assembly installed.
② The pump sound pressure level has been updated to an Equivalent Continuous Sound Level (LAeq) tomeet the intent of ANSI S1. 13-1971, CAGI-PNEUROP S5.1 using four microphone locations.

	"G"	"L"	"R" Inlet / Outlet
PH30F-ASP-SXX-C	32" (812.8 mm)	2-3/4" (69.9 mm)	3 - 8 NPTF - 1
PH30F-BSP-SXX-C	32" (812.8 mm)	2-3/4" (69.9 mm)	Rp 3 (3 - 11 BSP parallel)
PH30F-DSP-SXX-C	33-15/16" (862.0 mm)	3-3/4" (95.25 mm)	
PH30F-FSP-SXX-C	33-15/16" (862.0 mm)	3-3/4" (95.25 mm)	

INGERSOLL RAND COMPANY LTD
209 NORTH MAIN STREET – BRYAN, OHIO 43506
(800) 495-0276 • FAX (800) 892-6276
arozone.com

© 2017
CCN 15318843

ARO Ingersoll Rand
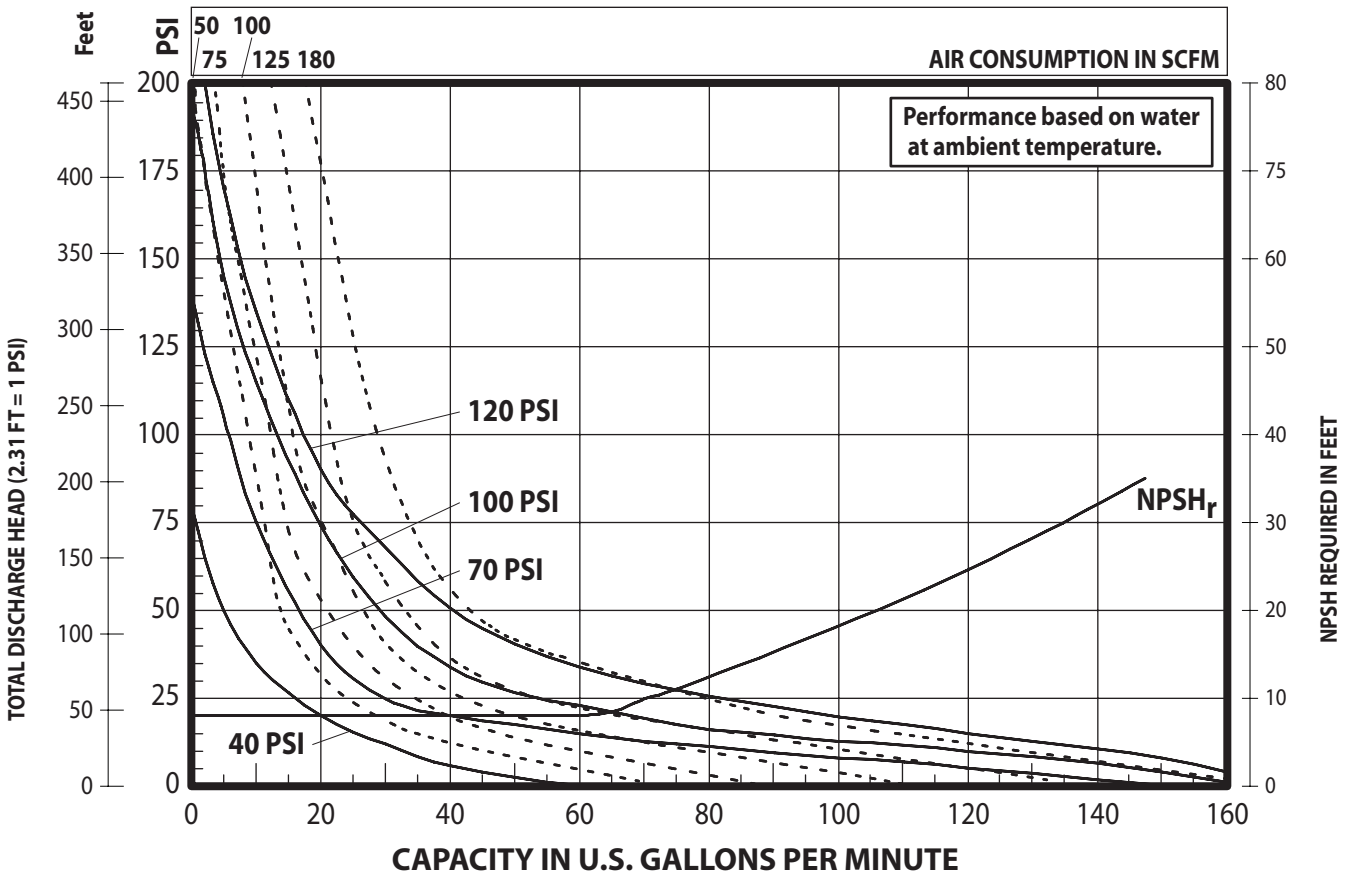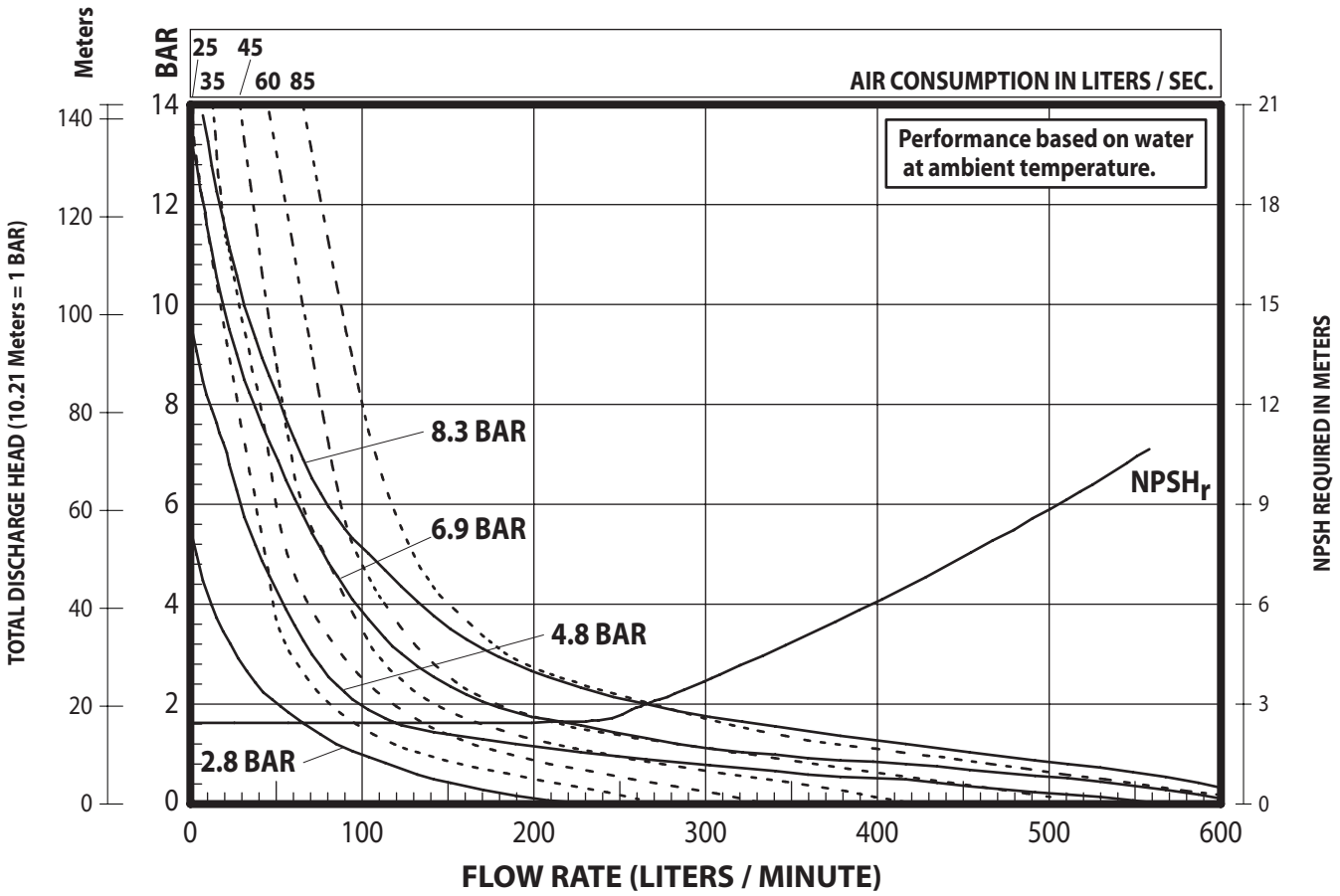
PH30F-XSS-SXX-C 3", METALLIC DIAPHRAGM PUMP