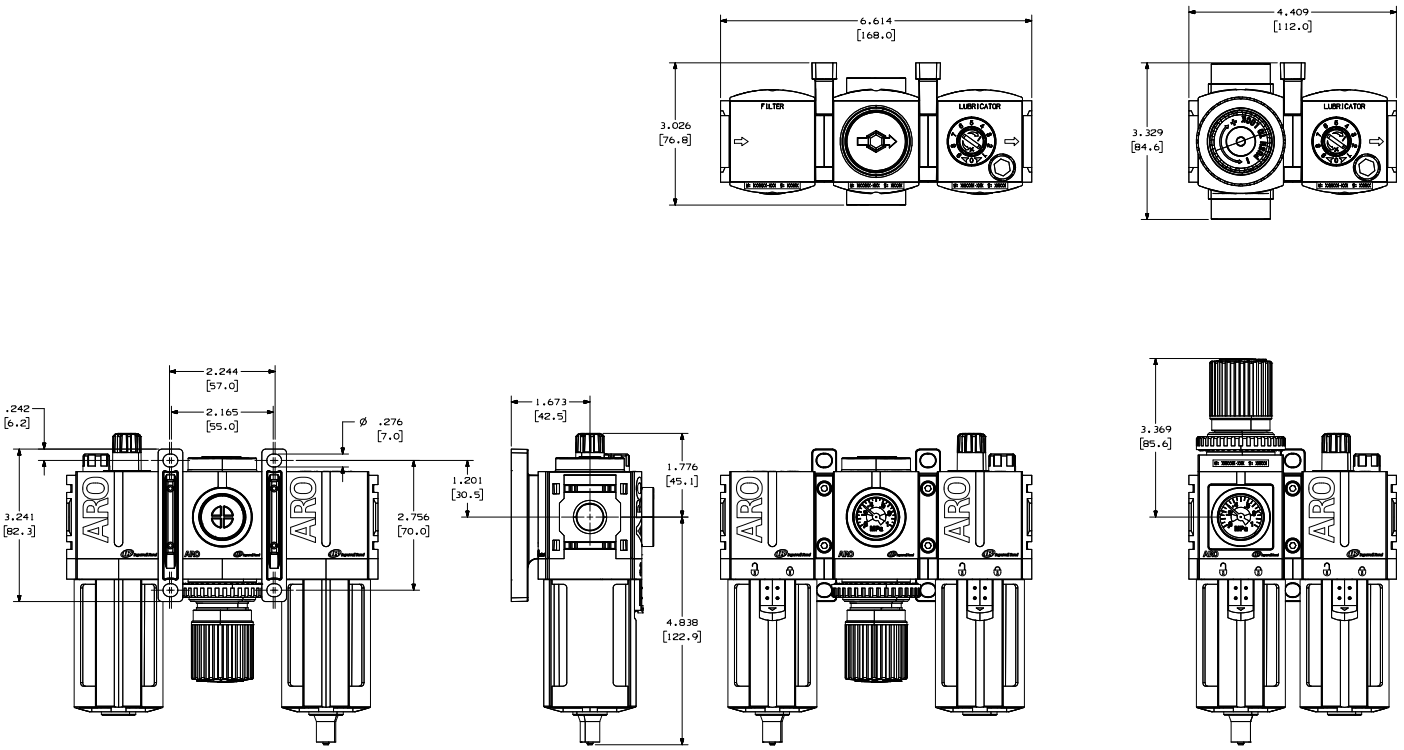

OUTLINE DRAWING

REV	DESCRIPTION	DATE	ECN
--			
--			

UNLESS OTHERWISE SPECIFIED: DIMENSIONS ARE INCHES PER ANSI Y14.5M-1994 REMOVE ALL BURRS AND SHARP EDGES BREAK NOT TO EXCEED .015 ANGLES: 1/2° ±2° CONC .015 TIR. ALL MACHINED SURFACES ARE 125	THIRD ANGLE PROJECTION	THIS DOCUMENT CONTAINS CONFIDENTIAL AND TRADE SECRET INFORMATION. IT IS THE PROPERTY OF INGERSOLL-RAND COMPANY. AND IS LENT ONLY UPON THE AGREEMENT THAT NO REPRODUCTION OR DISCLOSURE AND RETENTION OF THE DOCUMENT ACCEPTS THE DOCUMENT IN CONFIDENCE AND AGREES THAT, EXCEPT AS AUTHORIZED IN WRITING BY INGERSOLL-RAND COMPANY, IT SHALL (1) NOT COPY THE DOCUMENT OR ANY COPY THEREOF OR USE THE DOCUMENT, OR TRADE SECRET INFORMATION THEREIN, (2) NOT COPY THE DOCUMENT, (3) NOT DISCLOSE TO ANYONE EXCEPT THE DOCUMENT OR THE CONFIDENTIAL OR TRADE SECRET INFORMATION THEREIN, (4) NOT USE THE DOCUMENT, AND (5) UPON REQUEST TO RETURN THE DOCUMENT, OR UPON DEMAND, RETURN THE DOCUMENT, ALL COPIES THEREOF, AND ALL MATERIAL COPIED THEREFROM.	MATERIAL N/A N/A HEAT TREAT N/A FINISH N/A	ENGLISH DENOTES REQUIRED REFERENCE DIMENSION DRN BY ROSHKO 07-14-06 CHD BY CONNIN 07-14-06 APPD BY THORP 07-14-06	INGERSOLL-RAND PRODUCTION EQUIPMENT DRAWING TITLE COMBINATION PART NO. C382X1-X ECN 15318249 REV 00 SIZE D SCALE FULL SHEET 1 OF 1	NEXT ASM. (REF) USED ON (REF) Inspirations Home Grooming Tools Products Division Plum GP

COPYRIGHT © 2006 INGERSOLL-RAND COMPANY ALL RIGHTS RESERVED