REV	DESCRIPTION	DATE	ECN
--	----------	--------	--------
--	----------	--------	--------

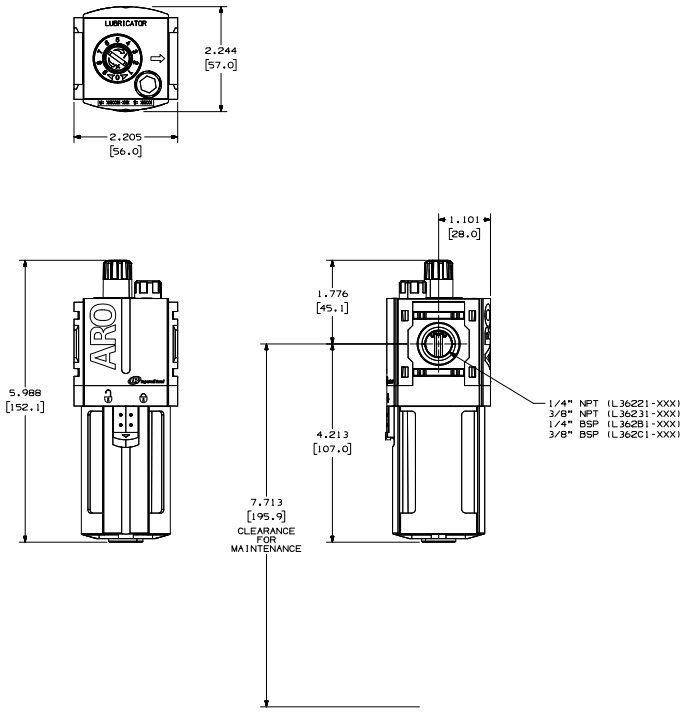

OUTLINE DRAWING

NEXT ASM. (REF)	USED ON (REF)
----------	----------

UNLESS OTHERWISE SPECIFIED DIMENSIONS ARE INCHES PER ANSI Y14.5M-1994

REMOVE ALL BURRS AND SHARP EDGES
BREAK NOT TO EXCEED .015

ANGLES: (+/-2°)
CONC .005 TIR.

ALL MACHINED SURFACES ARE 125

THIRD ANGLE PROJECTION

REPRODUCTION OF AN COPY OF THIS DRAWING IS PROHIBITED WITHOUT WRITTEN PERMISSION FROM INGERSOLL-RAND COMPANY, ARO DIVISION, ARO, 01450 MANCHESTER DR, MINERVA, KENTUCKY 41129

COPYRIGHT © 2008
INGERSOLL-RAND COMPANY
ALL RIGHTS RESERVED

THIS DOCUMENT CONTAINS CONFIDENTIAL AND TRADE SECRET INFORMATION. IT IS THE PROPERTY OF INGERSOLL-RAND COMPANY, ARO DIVISION, ARO, 01450 MANCHESTER DR, MINERVA, KENTUCKY 41129 AND ACCEPTANCE OR RETENTION OF THE DOCUMENT ACCEPTS THE DOCUMENT IN CONFIDENCE AND AGREES THAT, EXCEPT AS AUTHORIZED IN WRITING BY INGERSOLL-RAND COMPANY, IT SHALL NOT BE REPRODUCED OR USED FOR THE BENEFIT OF, OR TRANSFERRED TO, ANY PERSON OR ENTITY OTHER THAN THE RECEIVING PARTY. (1) NOT COPY THE DOCUMENT, (2) NOT DISCLOSE TO OTHERS EXCEPT THE DOCUMENT OR THE CONFIDENTIAL OR TRADE SECRET INFORMATION CONTAINED IN THE DOCUMENT, (3) NOT USE THE DOCUMENT, AND TO RETURN THE DOCUMENT, UPON DEMAND, RETURN THE DOCUMENT, ALL COPIES THEREOF, AND ALL MATERIAL COPIED THEREFROM.

MATERIAL	N/A	
	N/A	
HEAT TREAT	N/A	
FINISH	N/A	

ENGLISH

DIM BY	ROSHKO	07-14-08
CHD BY	CONNIN	07-14-08
PROJECT LEADER (APP)	THORP	07-14-08

THE ONLY TRUE REPRESENTATION OF A PRODUCT IS THE 3D SOLID MODEL.

INGERSOLL-RAND
PRODUCTION EQUIPMENT

Ingersoll-Rand Company
Aro Products Division
Bryan OH

DRAWING TITLE
LUBRICATOR

ECN	PART NO.	REV
15313422	L36211-X	00

SIZE D SCALE [1] SHEET 1 OF 1