| REV | DESCRIPTION | DATE | ECN |
|---|---|---|---|
| -- | ---------- | -------- | -------- |
| -- | ---------- | -------- | -------- |

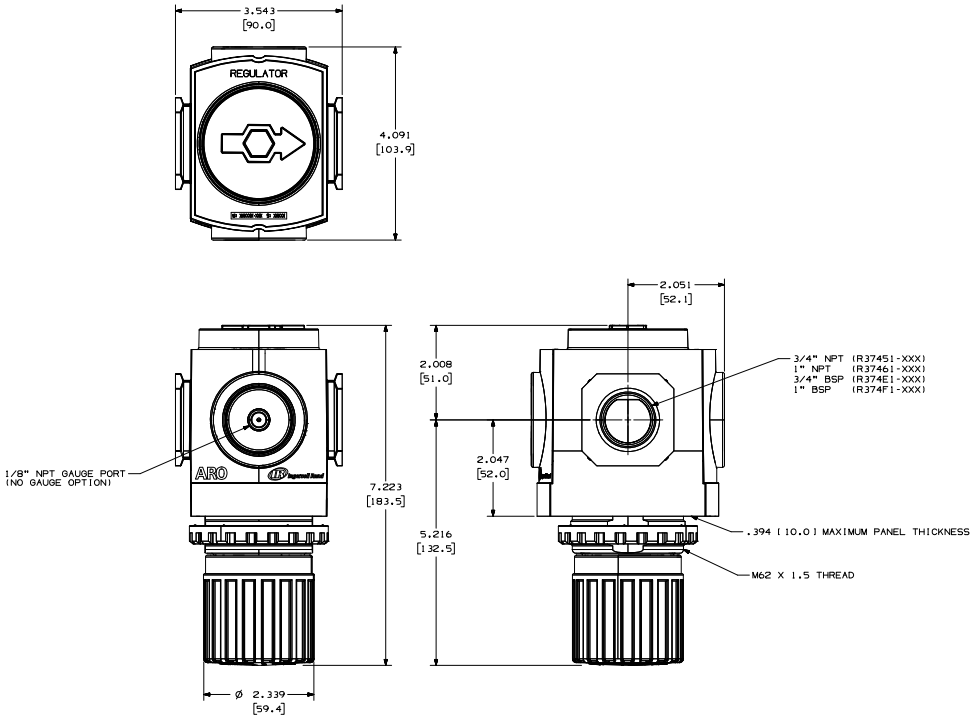


OUTLINE DRAWING

| NEXT ASM. (REF) | USED ON (REF) |
|---|---|
| ---------- | ---------- |

UNLESS OTHERWISE SPECIFIED DIMENSIONS ARE INCHES REF AND TOLERANCE PER ANSI Y14.5M-1994

REMOVE ALL BURRS AND SHARP EDGES
BREAK NOT TO EXCEED .015

ANGLES: 1/2° BC
CONC .015 TIR.

ALL MACHINED SURFACES ARE 125

THIRD ANGLE PROJECTION

REPRODUCTION OF AN EXCERPT OF THIS DRAWING IS STRICTLY PROHIBITED WITHOUT WRITTEN PERMISSION OF INGERSOLL-RAND COMPANY

COPYRIGHT © 2008
INGERSOLL-RAND COMPANY
ALL RIGHTS RESERVED

THIS DOCUMENT CONTAINS CONFIDENTIAL AND TRADE SECRET INFORMATION. IT IS THE PROPERTY OF INGERSOLL-RAND COMPANY AND IS LOANED TO THE RECIPIENT ON THE CONDITION THAT THE RECEIPT AND RETENTION OF THE DOCUMENT ACCEPTS THE DOCUMENT IN CONFIDENCE AND AGREES THAT, EXCEPT AS AUTHORIZED IN WRITING BY INGERSOLL-RAND COMPANY, IT WILL (1) NOT REPRODUCE, COPY OR PASS THE DOCUMENT OR THE INFORMATION CONTAINED THEREIN, (2) NOT COPY THE DOCUMENT, (3) NOT DISCLOSE TO OTHERS EXCEPT THE DOCUMENT OR THE CONFIDENTIAL OR TRADE SECRET INFORMATION CONTAINED THEREIN, (4) NOT USE THE DOCUMENT, AND TO RETURN THE DOCUMENT, UPON DEMAND, RETAIN THE DOCUMENT, ALL COPIES THEREOF, AND ALL MATERIAL COPIED THEREFROM.

MATERIAL: N/A
N/A
HEAT TREAT: N/A
FINISH: N/A

ENGLISH
DIMENSIONS REQUIRED WITHOUT DIMENSION

| | | |
|---|---|---|
| DWN BY | ROSHKO | 07-14-08 |
| CKD BY | CONNIN | 07-14-08 |
| PROJECT ENGINEER | THORP | 07-14-08 |

THE ONLY TRUE REPRESENTATION OF A DRAWING IS THE 3D SOLID MODEL.

INGERSOLL-RAND
PRODUCTION EQUIPMENT
Ingersoll-Rand Company
Power Products Division
Bryan OH

DRAWING TITLE: REGULATOR

PROJECT NO.: 15312531
PART NO.: R374X1-X
REV: 00
SIZE: D SCALE: 1:1 SHEET 1 OF 1