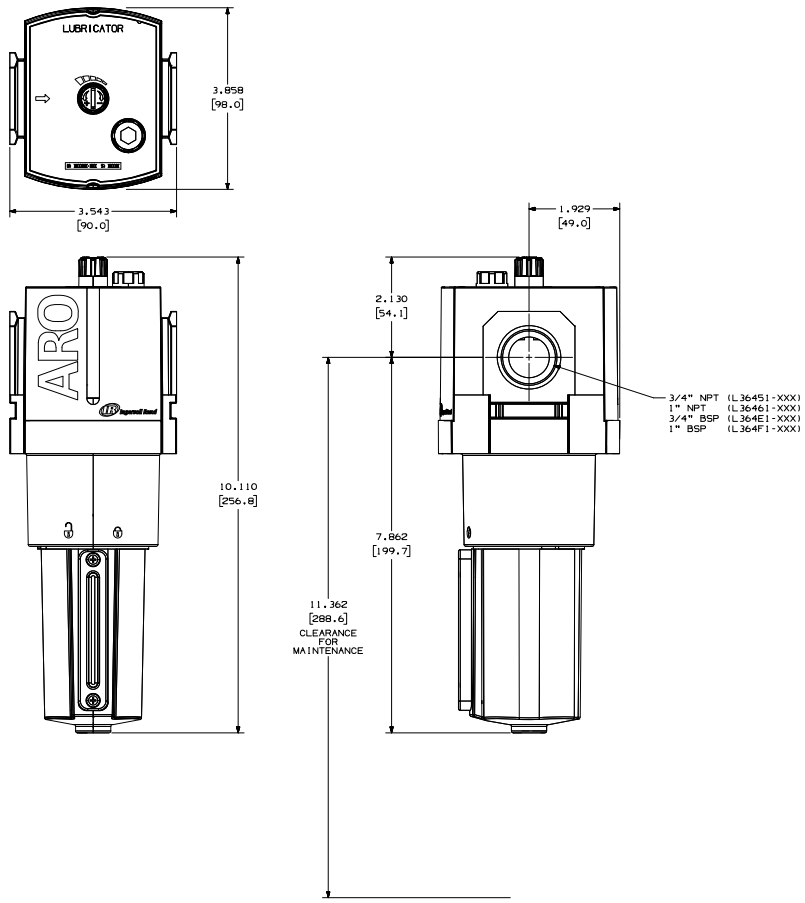

OUTLINE DRAWING

REV	DESCRIPTION	DATE	ECN
--			
--			

NEXT ASM. (REF)	USED ON (REF)

UNLESS OTHERWISE SPECIFIED DIMENSIONS ARE INCHES PER ANSI Y14.5M-1994

REMOVE ALL BURRS AND SHARP EDGES
BREAK NOT TO EXCEED .015

ANGLES: (+/-2C°-
CONC .015 TIR.

ALL MACHINED SURFACES ARE 125

THIRD ANGLE PROJECTION

REPRODUCTION
IN WHOLE OR IN COPY OF THIS DRAWING IS STRICTLY PROHIBITED EXCEPTS AS PERMITTED BY THE REGULATIONS AND STATE APPLICABLE WORKSHOP, SUPERVISOR OR MANUFACTURER

COPYRIGHT © 2008
INGERSOLL-RAND
ALL RIGHTS RESERVED

THIS DOCUMENT CONTAINS CONFIDENTIAL AND TRADE SECRET INFORMATION. IT IS THE PROPERTY OF INGERSOLL-RAND COMPANY. ANY USE OR DISCLOSURE OF THE INFORMATION CONTAINED HEREIN WITHOUT ITS WRITTEN CONSENT IS STRICTLY PROHIBITED. THE RECEIPT AND RETENTION OF THE DOCUMENT ACCEPTS THE DOCUMENT IN CONFIDENCE AND AGREES THAT, EXCEPT AS AUTHORIZED IN WRITING BY INGERSOLL-RAND COMPANY, IT WILL NOT (1) REPRODUCE, COPY OR TRANSFER THE DOCUMENT OR ANY PORTION THEREOF, OR TRANSFER THE INFORMATION THEREIN, (2) NOT COPY THE DOCUMENT, (3) NOT DISCLOSE TO OTHERS EXCEPT THE DOCUMENT OR THE CONFIDENTIAL OR TRADE SECRET INFORMATION CONTAINED THEREIN, (4) NOT USE THE DOCUMENT AND TO RETURN THE DOCUMENT, UPON DEMAND, RETURN THE DOCUMENT, ALL COPIES THEREOF, AND ALL MATERIAL COPIED THEREFROM.

MATERIAL	N/A
	N/A
HEAT TREAT	N/A
FINISH	N/A

ENGLISH

ID	ADDITIONAL REQUIRED DEVICE DIMENSION
DWN BY	ROSHKO 07-14-08
CKD BY	CONNIN 07-14-08
PROJECT LEADER (APP)	THORP 07-14-08

THE ONLY TRUE REPRESENTATION OF A PRODUCT IS THE 3D SOLID MODEL.

INGERSOLL-RAND
PRODUCTION EQUIPMENT

Ingersoll-Rand Company
Power Products Division
Bryan OH

DRAWING TITLE
LUBRICATOR

DCN	PART NO.	REV
15312549	L364X1-X	00

SIZE D SCALE [1] SHEET 1 OF 1